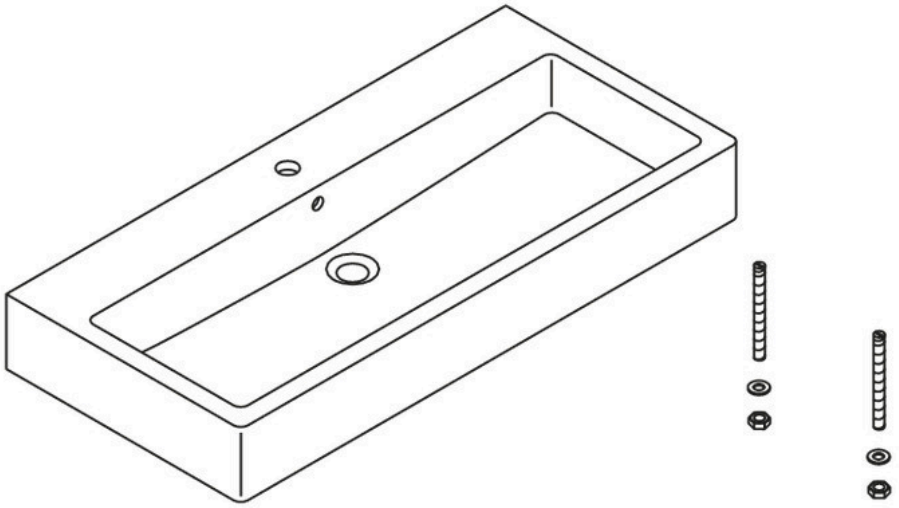

22.01 We reserve the right to make technical improvments and design modifications to the products illustrated.

**DURAVIT AG**, Werderstr. 36, 78132 Hornberg, Germany, Phone +49 78 33 700, Fax +49 78 33 70 289, info@duravit.de, www.duravit.de