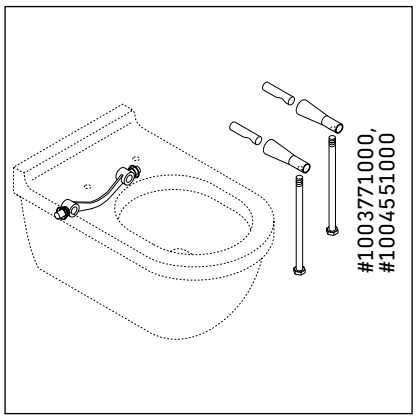
#1003771000,
#1004551000

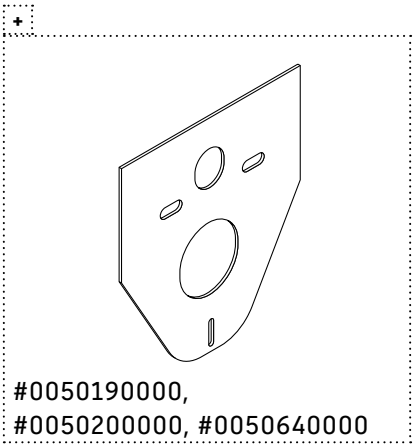
+
#0050190000,
#0050200000, #0050640000

1

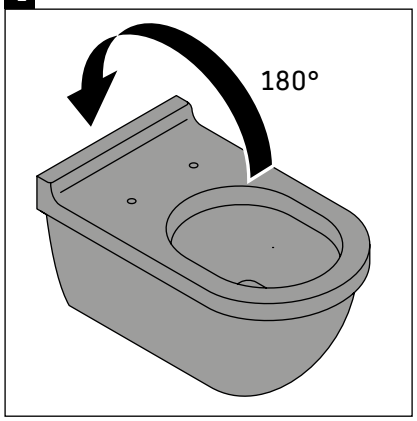
180°

2

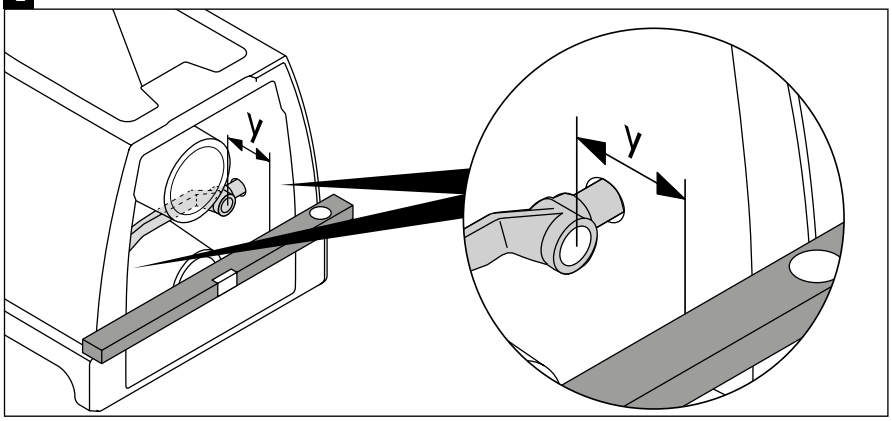
y
y

3

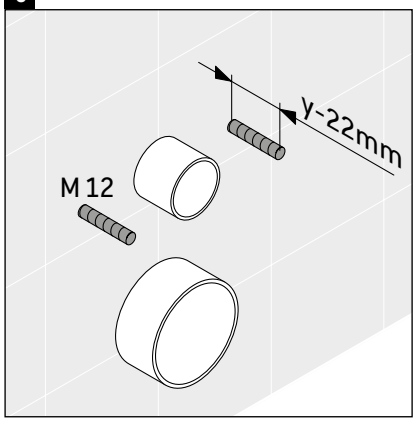
y-22mm
M 12

4

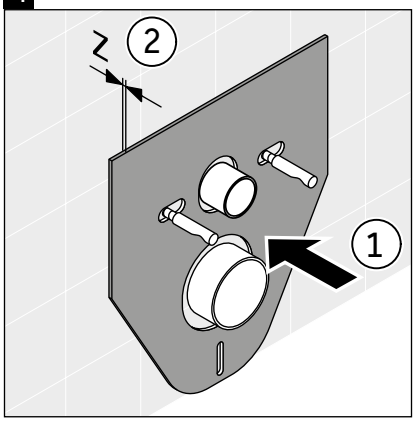
z
2
1

5

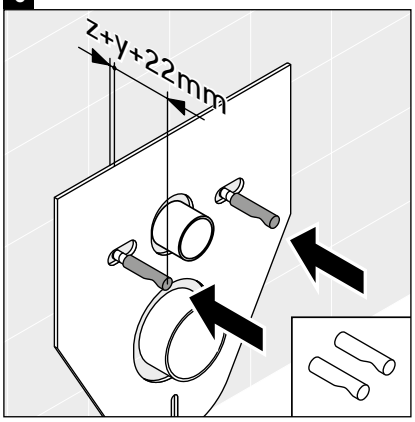
z+y+22mm

6

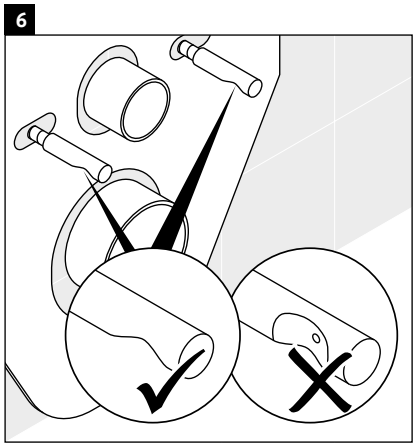

7

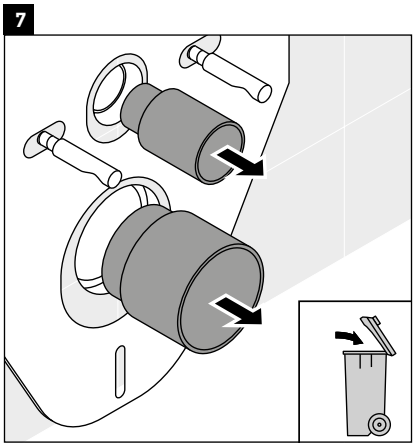

8

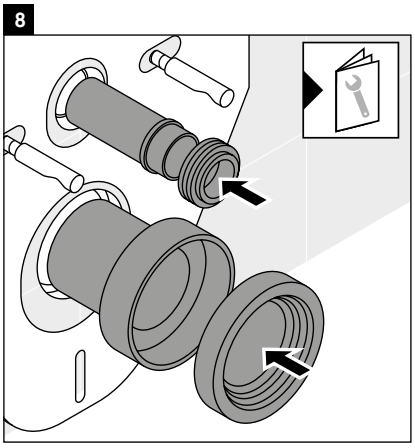

9

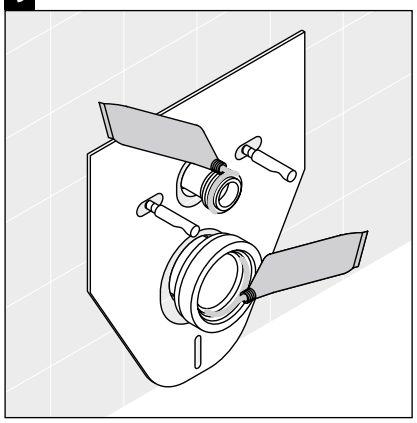

10

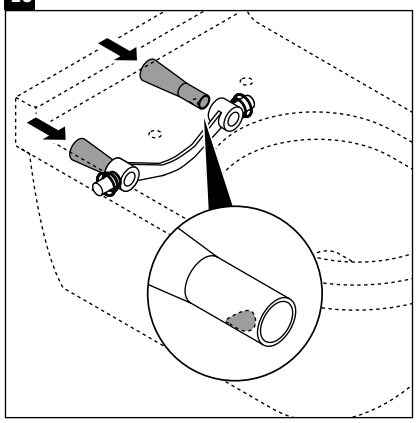

11

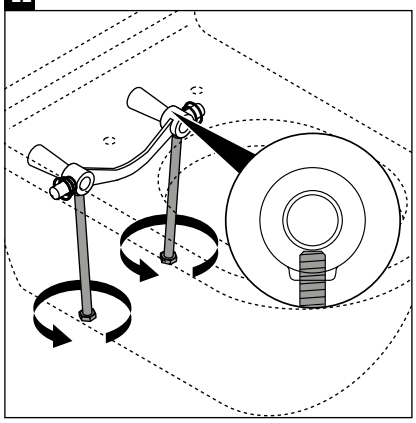

12

13

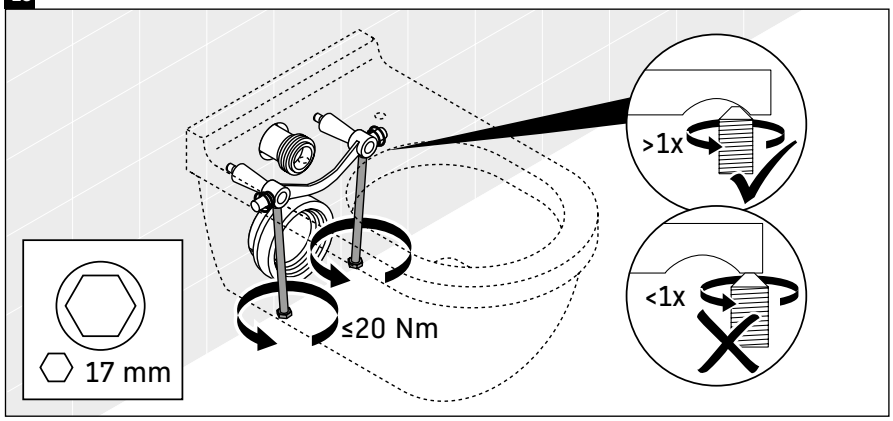

14

56767
Best.-Nr. 70000133/21.06.17 We reserve the right to make technical improvements and enhance the appearance of the products shown.