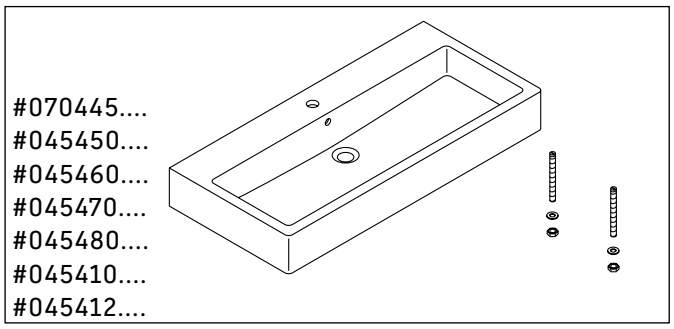

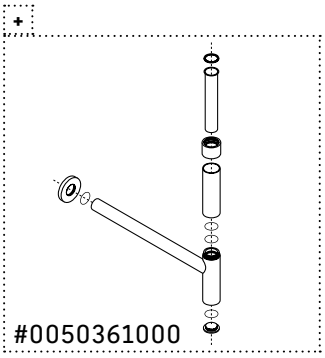

1

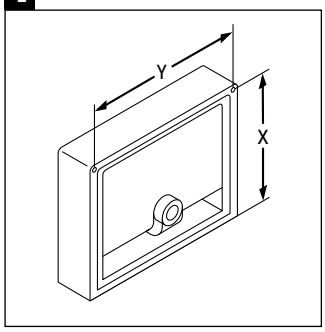

2a

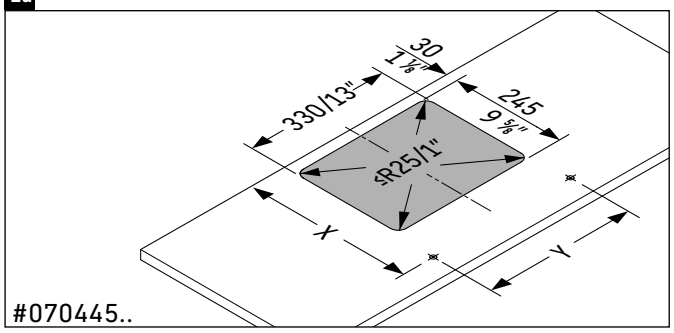

2b

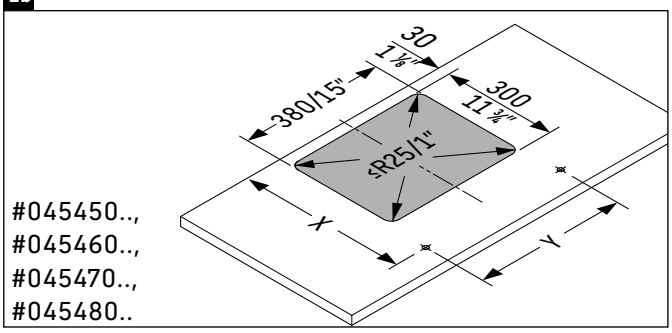

2c

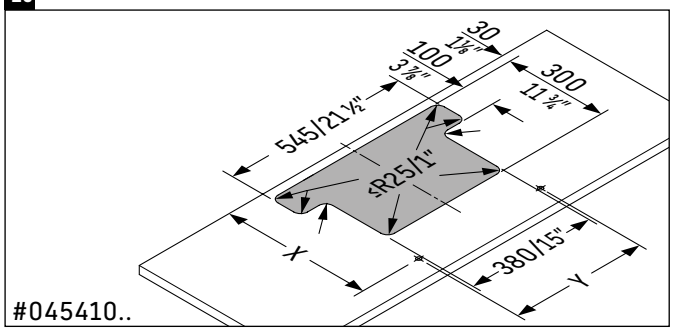

2d

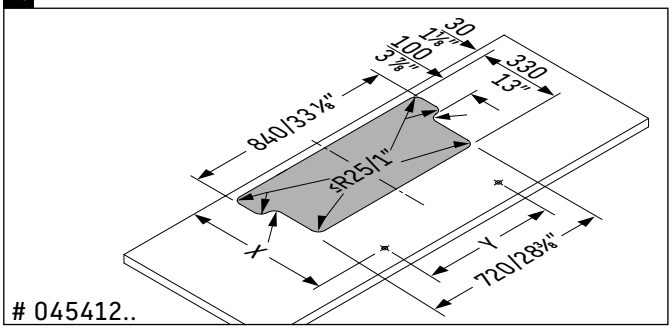

3

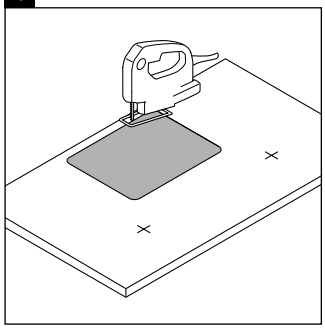

4

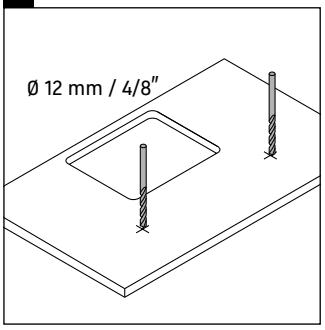

5

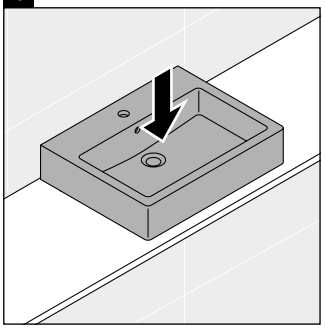

6a

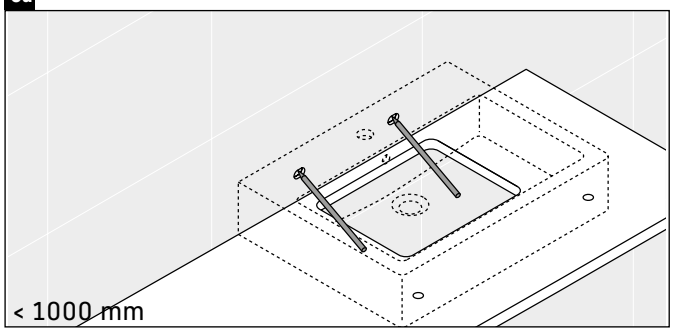

6b

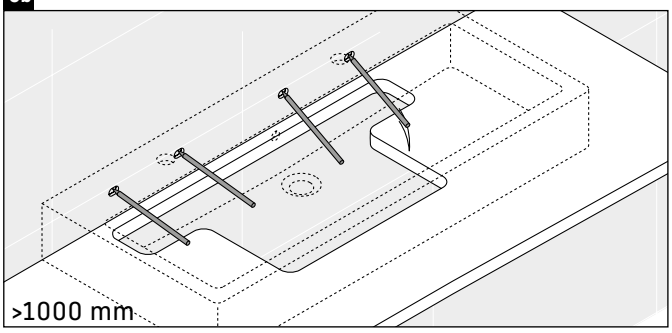

7

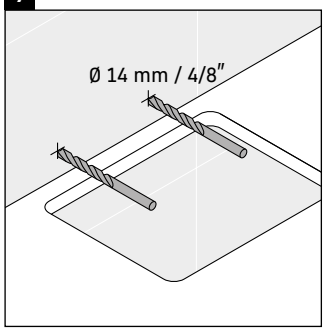

8

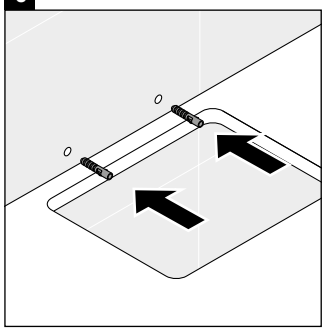

9

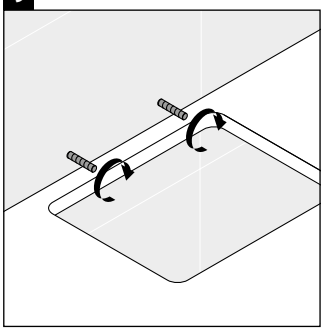

10

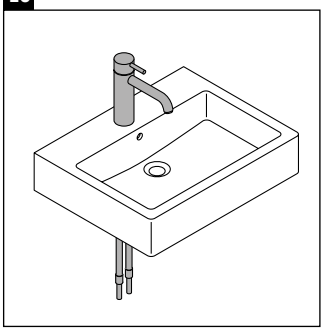

11

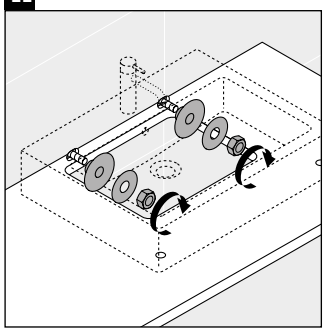

12

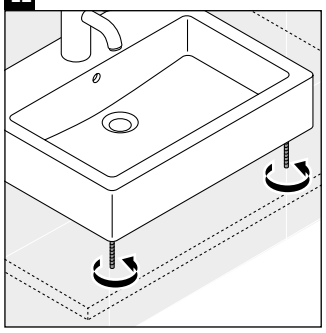

13

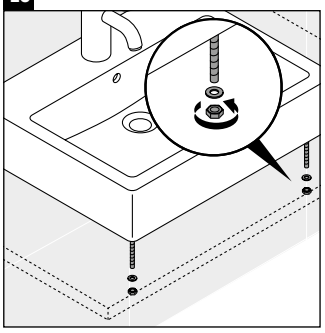

14

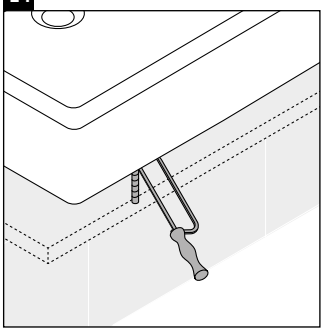

15

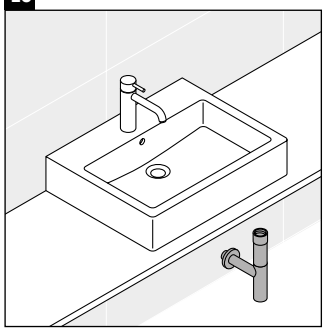

16

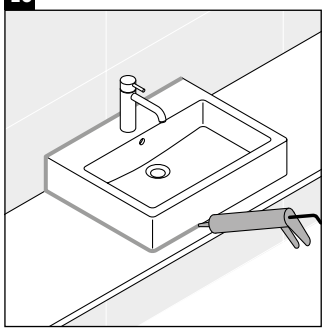

Best.-Nr. 57225/20.10.2 We reserve the right to make technical improvements and enhance the appearance of the products shown.

DURAVIT AG, Werderstr. 36, 78132 Hornberg, Germany, Phone +49 78 33 700, Fax +49 78 33 70 289, info@duravit.de, www.duravit.de