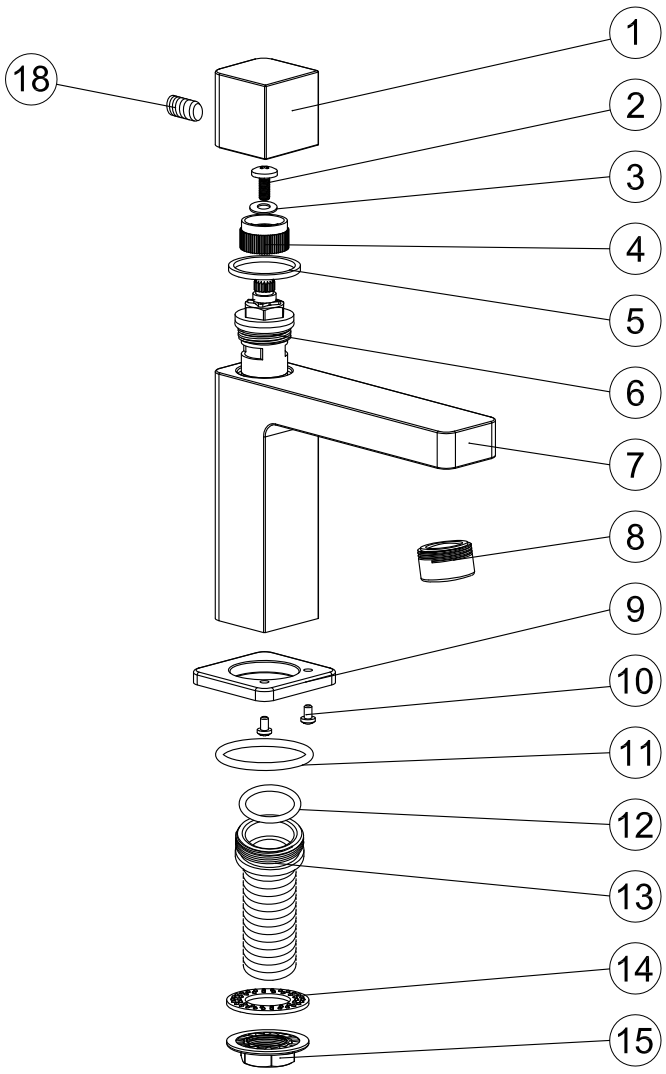

A

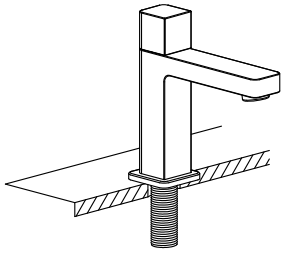
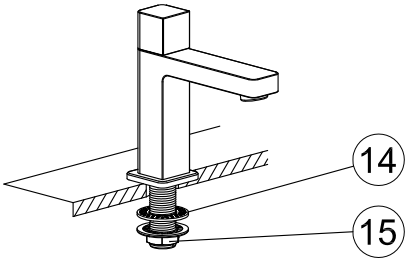
B